4104 01/02/13/14/24/26/28/29/31/32/34/35/46/57/62/71/72/74/75/77/80/83/86/89/93/99

4105 00/11/12/20/21/23/25/26/28/29/31/33/34/45/46/55/60

legrand®

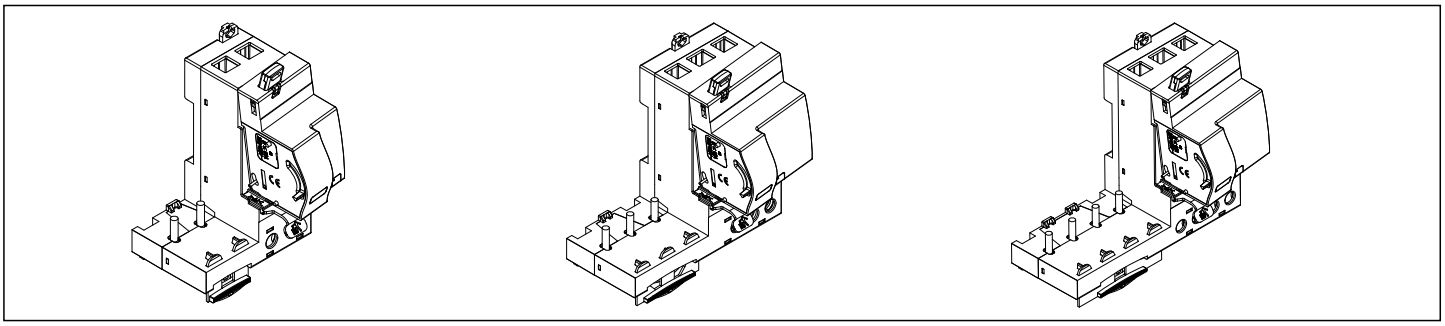

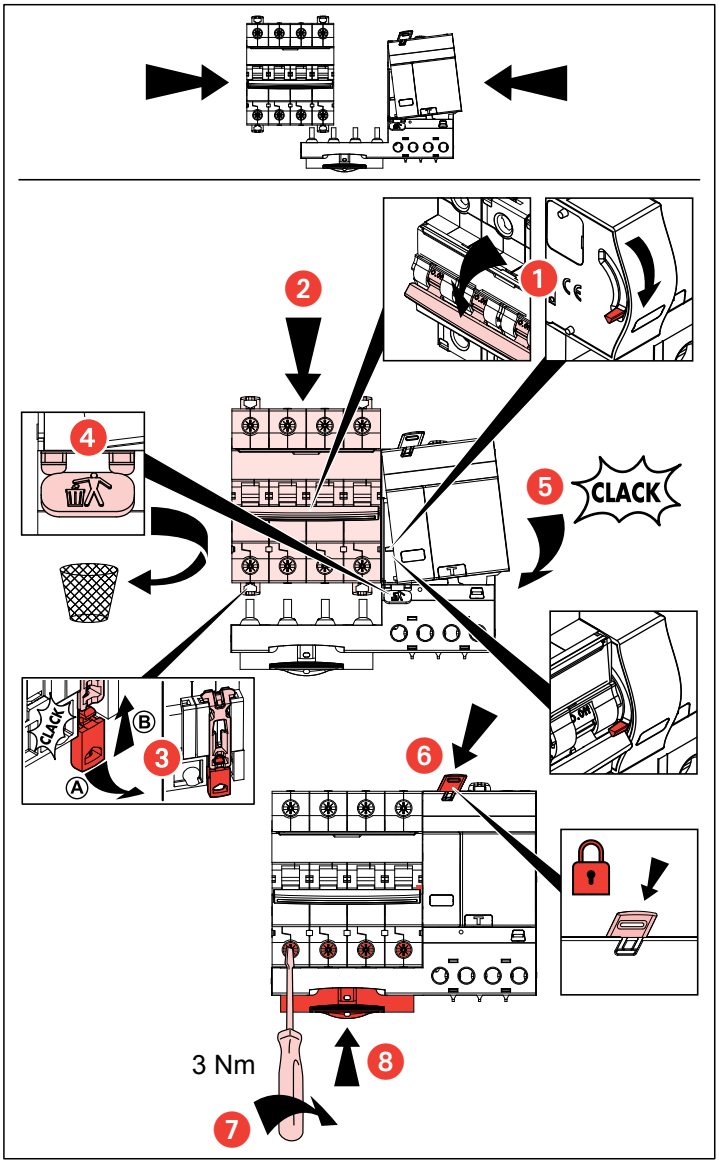

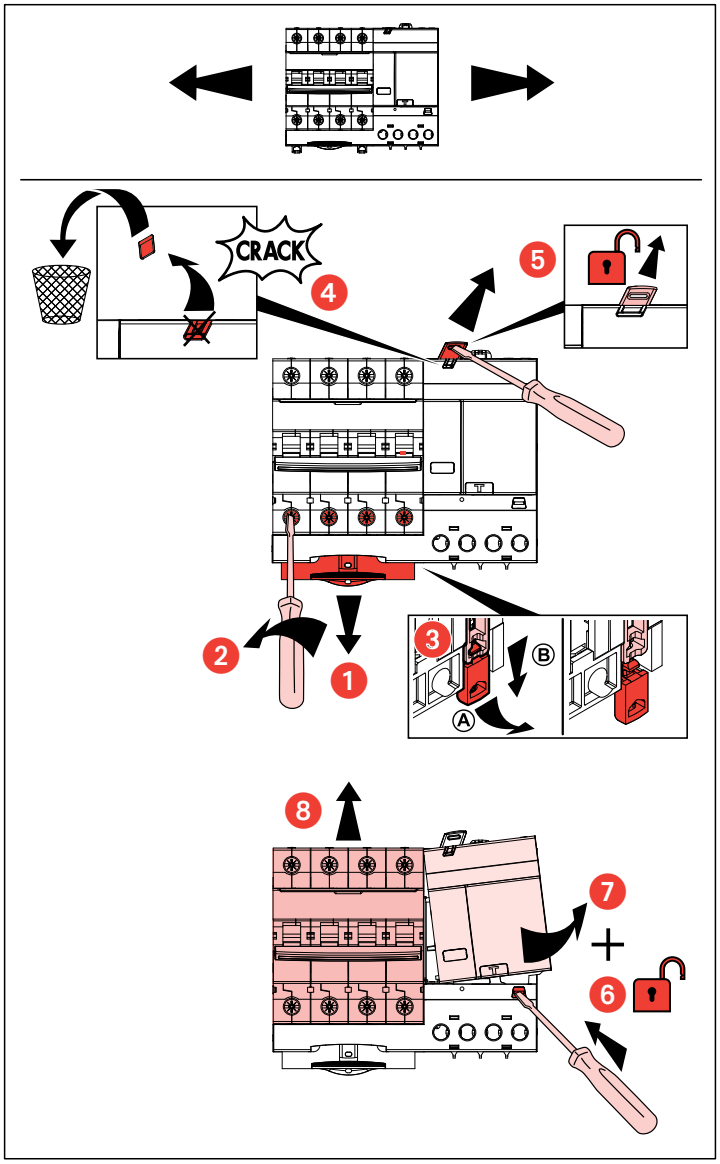

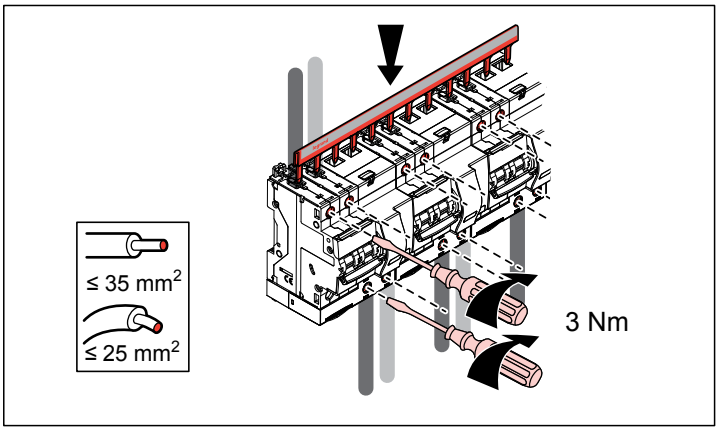

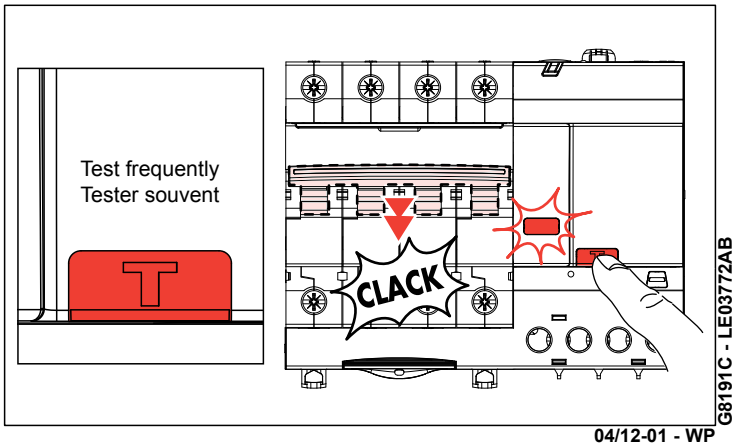

G8191C - LE03772AB

04/12-01 - WP